	DR	APP

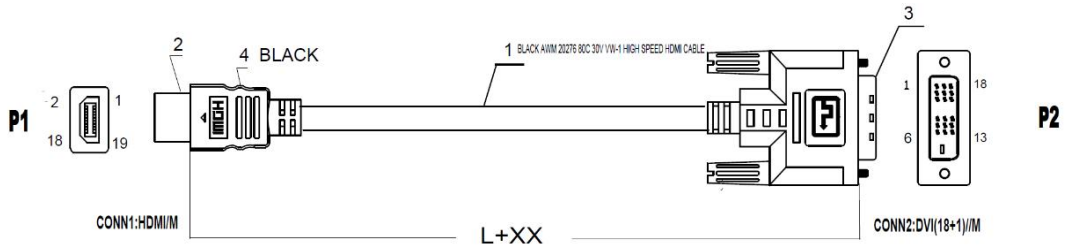

PIN OUT

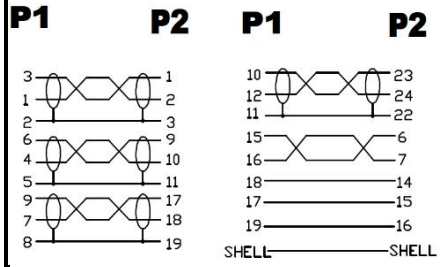

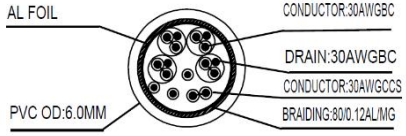

MODEL	LENGTH	TOLERANCE
77480	1000	10
77481	1500	15
77482	2000	20
77483	3000	20
77487	5000	50
77488	10000	100

This cable you can use bidirectional, which means you can also connect devices with a HDMI-A source intreface to sink devices with a DVI-D interface.

DVI-Anschluss	Signal	Kompatibel mit	Audio	Schema
DVI-A	Analog	VGA	nein	
DVI-D	Digital	HDMI	über DVI-HDMI (wird nicht von allen Grafikkarten unterstützt)	
DVI-I	Analog & Digital	VGA & HDMI	über DVI-HDMI (wird nicht von allen Grafikkarten unterstützt)	

RoHS compliant

NO	PARTS	DESCRIPTION
5	SCREW	34*37MM NICKLE
4	MOLDING	80℃ 45P PVC
3	CONN. 2	DVI18+1 MALE
2	CONN. 1	HDMI MALE
1	DVI CABLE	(30AWGBC*1P+D+AL+MLARY)*4P+30AWGCCS *1P+30AWGCCS*3C+AL+D+B80*0.12AL/Mg,OD:6.0mm

DESCRIPTION	HDMI - DVI CONNECTION CABLE AWG 30						
SIZE	A4	DATE	28.07.2025	CHECKED	B2068	TOL	77480
UNIT	MM	DRAWN	R.Hüller	APPROVED			
CUSTOM TARIF NO.: 85444290900							

		DR	APP

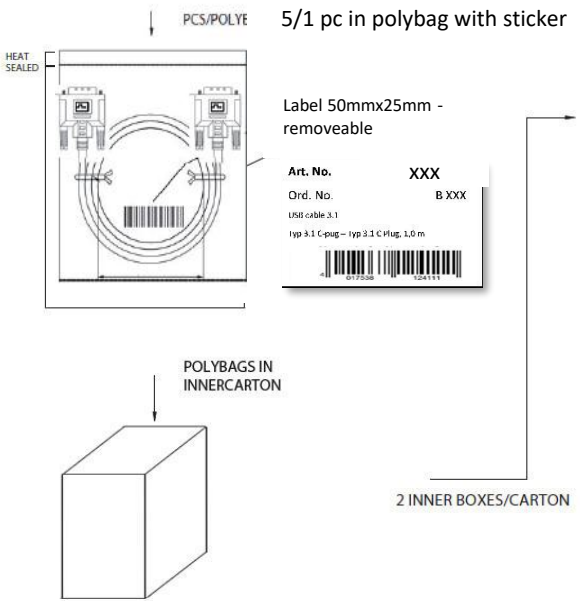

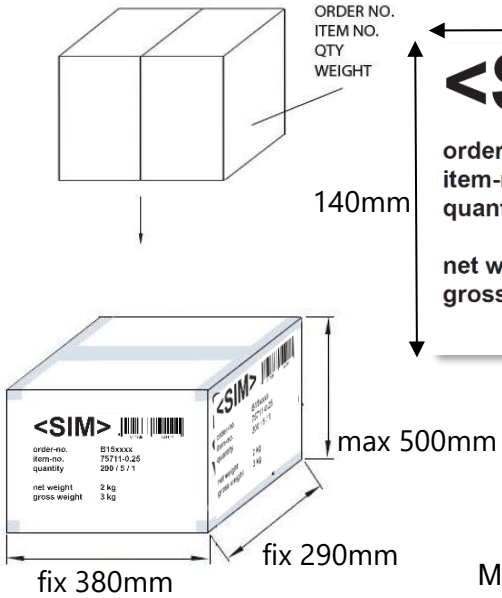

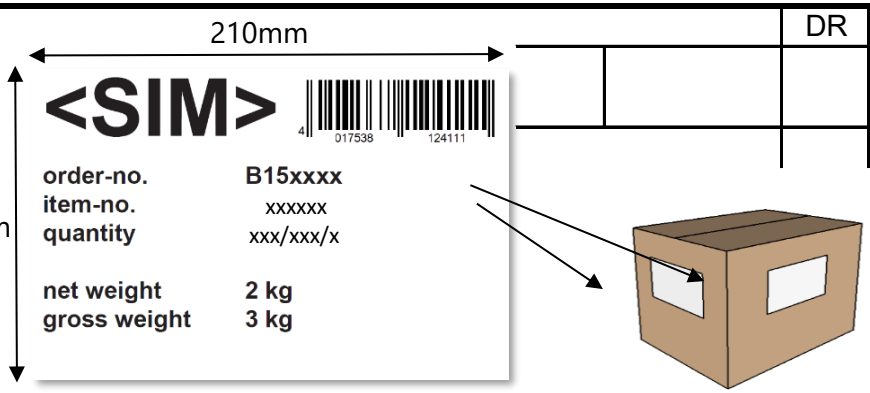

Max. 15 kg.

Note: Connectors must be Inside Cable Rolling

Only use strong Cartons with printed letters
Handwritten not allowed !!!

ART.NO.	LENGTH	ROLLING SIZE	NET.WEIGHT (g)	PACKING	EAN CODE
77480	1.0m	115x145x35mm	79g	100 EXP / 50 INNER - 5/1 pc in pb with st.	4017538030108
77481	1.5m	130x130x25mm	95g	100 EXP / 50 INNER - 5/1 pc in pb with st.	4017538030207
77482	2.0m	140x140x40mm	114g	80 EXP / 40 INNER - 5/1 pc in pb with st.	4017538030252
77483	3.0m	130x130x40mm	149g	50 EXP / 25 INNER - 5/1 pc in pb with st.	4017538030306
77485	5.0m	130x130x40mm	280g	40 EXP / 20 INNER - 5/1 pc in pb with st.	4017538030153
77487	7.5m	160x160x50mm	389g	20 EXP / 10 INNER - 1 pc in pb with st.	4017538030405
77488	10.0m	190x190x50mm	520g	20 EXP / 10 INNER - 1 pc in pb with st.	4017538030450

DESCRIPTION		HDMI - DVI CONNECTION CABLE AWG 30					
SIZE	A4	DATE	28.07.2025	CHECKED		TOL	77480
UNIT	MM	DRAWN	R.Hüller	APPROVED			
CUSTOM TARIF NO.: 85444290900							