	REVISED	APP

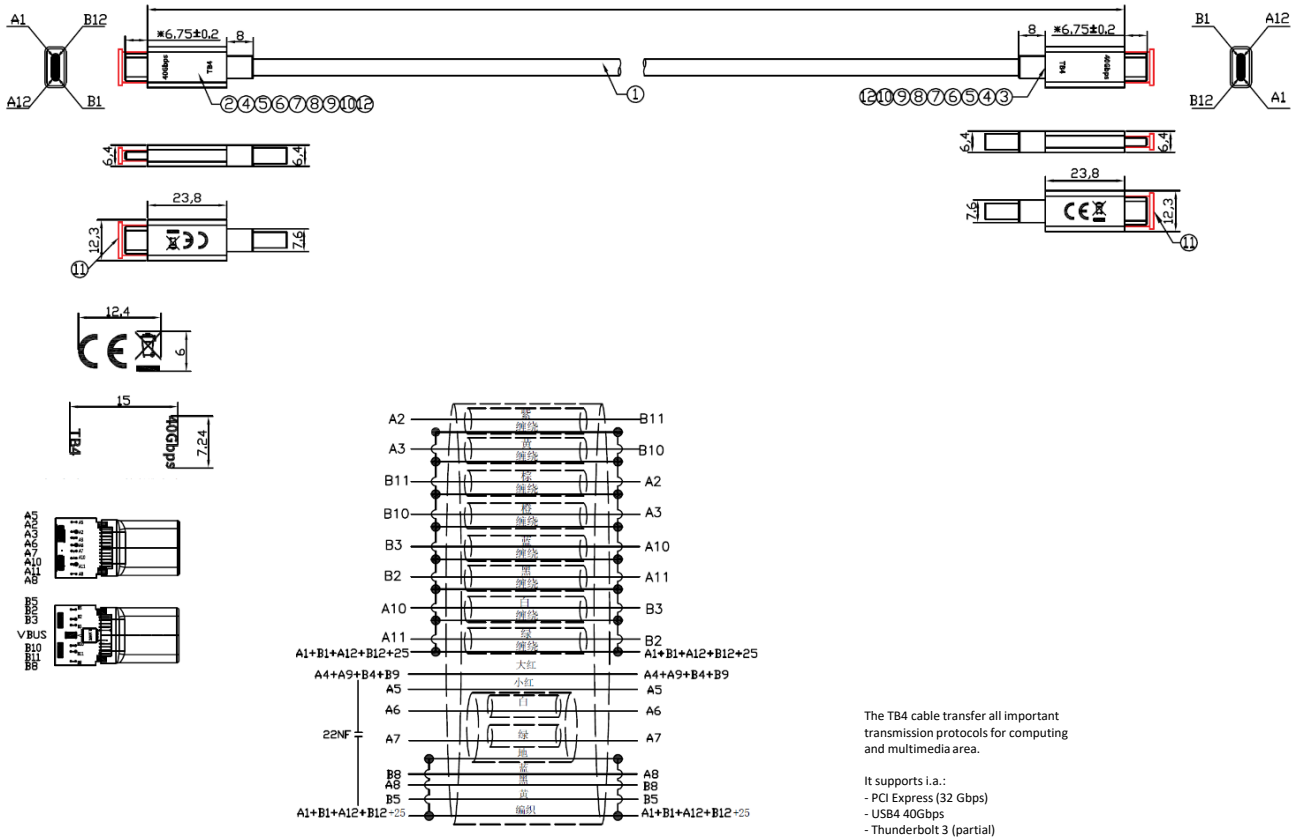

The TB4 cable transfer all important transmission protocols for computing and multimedia area.

It supports i.a.:
- PCI Express (32 Gbps)
- USB4 40Gbps
- Thunderbolt 3 (partial)
- DisplayPort 1.4 up to 2x 4K oder 1x 8K (HBR2, MST)
- Thunderbolt Networking up to 10 Gbps
- PowerDelivery (20V/5A)

Connect your notebook to your docking station with just one cable and you get access to all important interfaces, devices with high energy requirements can also be charged simultaneously with up to 100 watts (depending on the hardware used)

With the Thunderbolt wake up function, you can use your Thunderbolt 4 docking station to start your notebook or wake up your end device from sleep mode. Thunderbolt 4 also supports daisy chaining, with daisy chain you can cascade up to 6 Thunderbolt 4 devices.

Info: Not all devices with USB-C® interface support the 240 watts fast charging capability (PD 3.0), the transmission of video signals (DP-Alternate Mode) or data transfer of 40 Gbps (USB4 40Gbps / Thunderbolt 4).
Please contact your device manufacturer for more informations.

· Connections: USB-C® plug to USB-C® plug
· Supports: DisplayPort 1.4 (up to 8K/6K/5K/60Hz, 2x 4K/60Hz), PD up to 100W (20V/5A), SuperSpeed USB 5/10/20Gbps, PCI Express 3.0, Bidirectional data transfer, Daisy Chain (up to 6 Devices), Thunderbolt Bus Power up to 15W, Thunderbolt Networking up to 10 Gbit/s (Peer-To-Peer), wake up from sleep over Thunderbolt 3 or 4 dockingstation;
· Bandwidth up to: 40 Gbps
· Chipset: EJ903W (Intel certified)
· Compatible to: Thunderbolt 3, Thunderbolt 4, USB4
· Number of shields: 3
· Wire material: tinned + silver-clad copper
· Wire structure: coaxial

· Plug: moulded with metal shielding
· Contact surface: pins gold plated 15µ
· Plug cover: metal (high quality aluminum alloy casing) integrated molding process, will not fall off
· Cable type: round cable
· Material cable sheath: soft PVC
· Cable sheath diameter (ca.): 4.8mm
· Color: black

NO	PART NAME	PICTURES AND COLORS CAN DIFFER FROM THE PRODUCT
1	CONNECTORS	USB-C PLUG - USB-C PLUG, PCB WITH EMARKER ELTRON EJ903W, GOLD PLATED CONTACTS 15U, INPUT MAX 20V 5A
2	MOLDING	METAL PLATE WITH PVC MOLDING AND METAL HOUSING
3	CABLE	(7/0.100S*1C+SP50/0.050T+CU+HM)*8C□ AX+[(7/0.080T*1C+CU+HM)*2C+D+AL]+7/ 0.080T*4C+43/0.100T*1C+F+PAPER+B16 /12/0.060T □D: 4.80mm

DESCRIPTION								USB-C® CONNECTING CABLE, TB4, ULTRAFLEX
SIZE	A4	DATE	02.12.2025	CHECKED		TOL		13-72005
UNIT	MM	DRAWN	R.Hüller	APPROVED				
CUSTOM TARIF NO.: 85444290900								

REVISED	APP

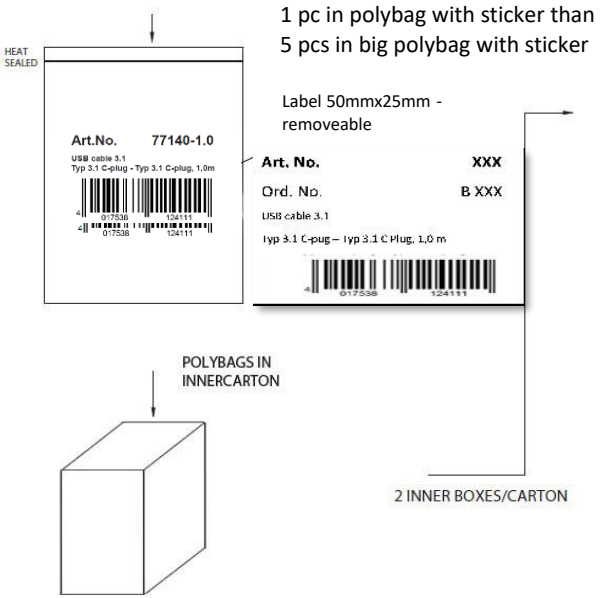

1 pc in polybag with sticker than
5 pcs in big polybag with sticker

Label 50mmx25mm - removeable

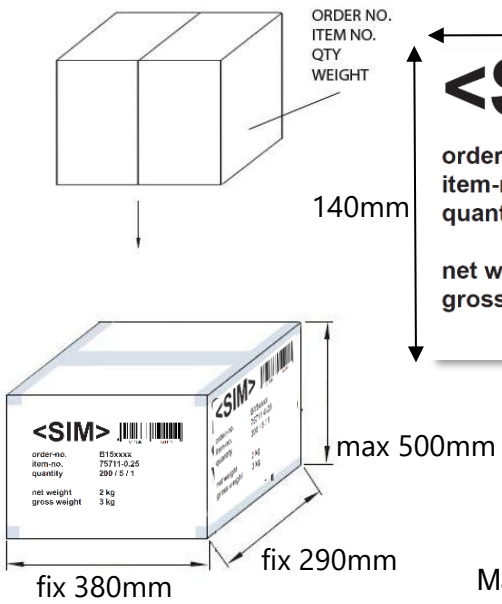

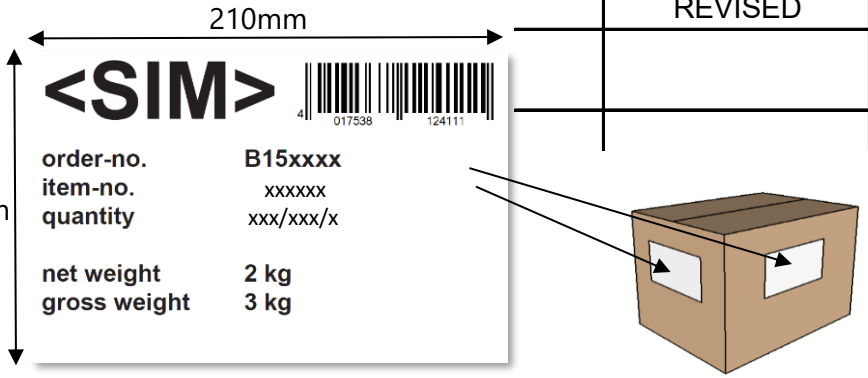

Max. 15 kg.

Note: Connectors must be Inside Cable Rolling

Only use strong Cartons with printed letters
Handwritten not allowed !!!

ART.NO.	LENGTH	ROLLING SIZE	NET.WEIGHT (g)	PACKING	EAN CODE
13-72005	0.25m	180x110x6mm	23g	250 EXP - 5/1 pc in pb with sticker	4017538160904
13-72015	0.5m	170x110x6mm	34g	250 EXP - 5/1 pc in pb with sticker	4017538160911
13-72025	1.0m	180x110x20mm	58g	200 EXP - 5/1 pc in pb with sticker	4017538160928
13-72155	1.5m	200x140x10mm	83g	120 EXP - 5/1 pc in pb with sticker	4017538160935
13-72035	2.0m	200x150x20mm	106g	100 EXP - 5/1 pc in pb with sticker	4017538160942

DESCRIPTION	USB-C® CONNECTING CABLE, TB4, ULTRAFLEX						
SIZE	A4	DATE	02.12.2025	CHECKED		TOL	13-72005
UNIT	MM	DRAWN	R.Hüller	APPROVED			
CUSTOM TARIF NO.: 85444290900							